Ax1	Bx1	Cx1	Dx1	Ex2	Fx4	Gx2	Hx2	Ix1
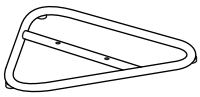	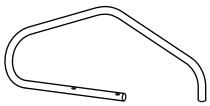	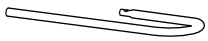	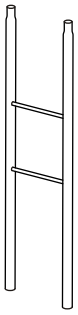		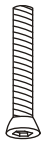			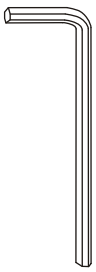

1

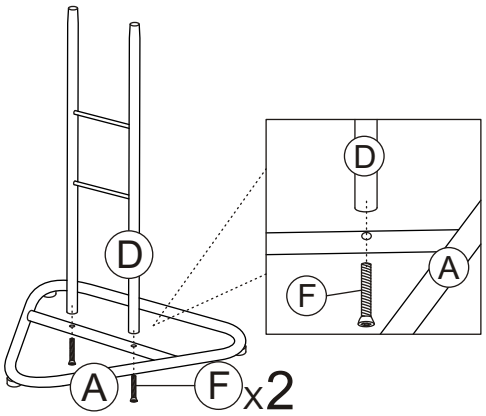

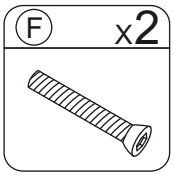

2

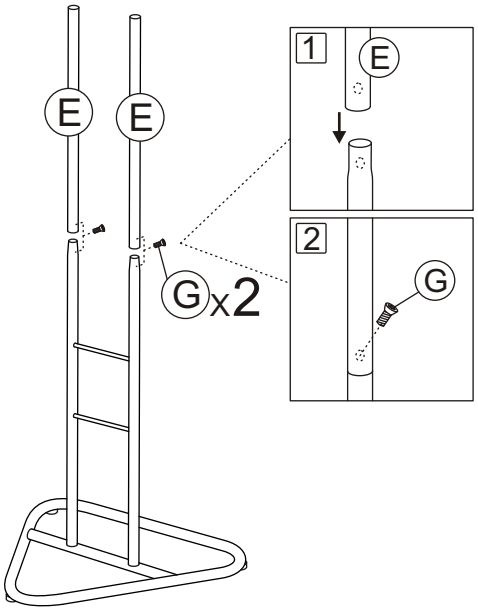

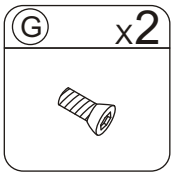

3

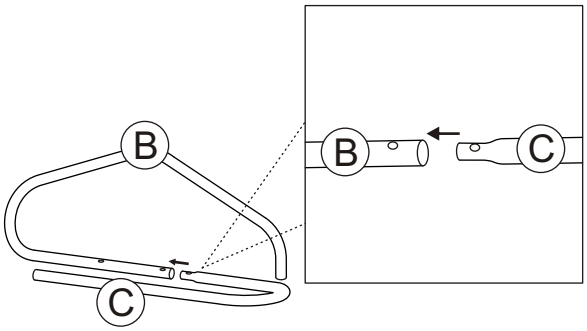
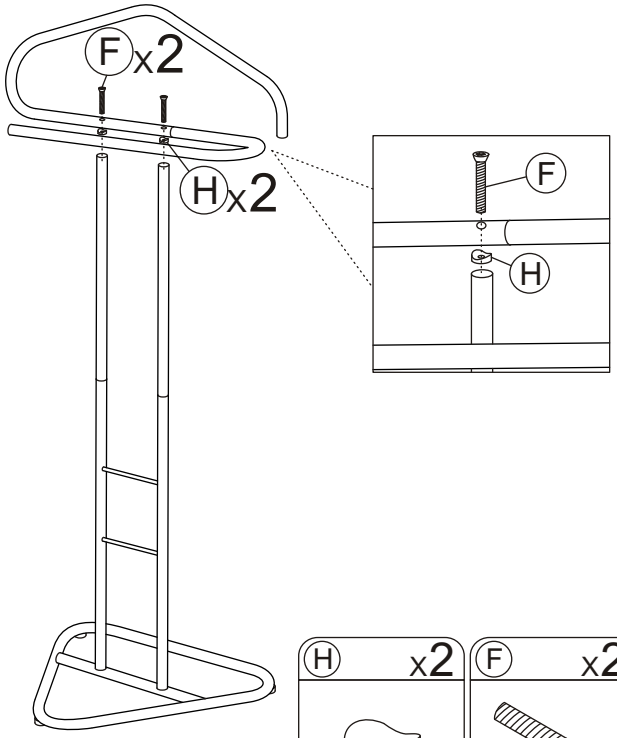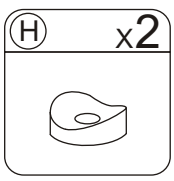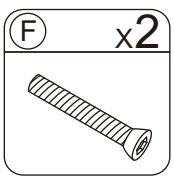
4